CAR PORT SHELTER, 4 X 8 X 3.05M, HEAVY DUTY COVER

MODEL NO: **GCP03**

Thank you for purchasing a Sealey product. Manufactured to a high standard, this product will, if used according to these instructions, and properly maintained, give you years of trouble free performance.

IMPORTANT: PLEASE READ THESE INSTRUCTIONS CAREFULLY. NOTE THE SAFE OPERATIONAL REQUIREMENTS, WARNINGS & CAUTIONS. USE THE PRODUCT CORRECTLY AND WITH CARE FOR THE PURPOSE FOR WHICH IT IS INTENDED. FAILURE TO DO SO MAY CAUSE DAMAGE AND/OR PERSONAL INJURY AND WILL INVALIDATE THE WARRANTY. KEEP THESE INSTRUCTIONS SAFE FOR FUTURE USE.



Refer to instruction manual



Wear eye protection



Wear protective gloves

❑ **WARNING!** This shelter is not designed to withstand high winds or severe weather conditions. Do not assemble, use, or leave unattended in windy conditions. If high wind speeds are forecast the shelter cover should be removed or the shelter should be dismantled to prevent damage or injury.
The manufacturer accepts no liability for damage caused by wind or improper use.

1. SAFETY

× This is a temporary structure and is not recommended as a permanent structure.
✓ Choose your shelter's location carefully. Check for overhead utility lines, branches, etc. **DO NOT** install near roofs or other structures that may shed snow, ice or excessive run-off onto your shelter. Keep away from electrical wires!
✓ Have an overview of all parts before attempting installation. Make sure all components are available.
× **DO NOT** use this product in environments for which it is not intended (i.e. extreme cold, high winds, extreme heat, heavy rainfall, etc).
× Always wear safety glasses when assembling this product. Wear gloves when working with tubing to prevent cuts or abrasions.
❑ **WARNING!** Anchors must be used with shelters. Covers should **NOT** be installed until it has been properly anchored to the ground.
✓ Proper anchoring and keeping cover tight and free of snow and debris, is the responsibility of the consumer. Damages caused by improper anchoring are not covered under warranty.
❑ **WARNING!** Keep all flame and heat sources away from the shelter fabric. The fabric will burn if left in continuous contact with a flame source.
× **DO NOT** use open flames or cooking or heating devices inside or in close proximity to the product, including all types of stoves, gas heaters, gas lanterns, citronella torches, mosquito coils, etc.
❑ **WARNING!** In order to reduce risk of burning and avoid damage, **DO NOT:** cook, smoke, refuel or use any open flame devices in or around the shelter; store flammable liquids (petrol, kerosene, propane, etc.) in the shelter; operate gas powered equipment in or around the shelter.
✓ Keep open flames a safe distance away from the shelter.
× **DO NOT** use hard-edged tools or instruments, such as rakes or shovels, to remove snow. These can cause punctures to the cover. **NEVER** start the engine of any vehicle or machine inside a closed shelter. Ensure that there is adequate ventilation for running engines and for any work with paints, cleaners, etc.
× **DO NOT** use bleach, alkaline or harsh detergents for cleaning. Doing so will damage the polycarbonate material. Soap and warm water are recommended.
✓ This temporary shelter is intended to offer protection from damage caused by the sun, light rain, light snow, tree sap, bird and animal excrement. **DO NOT** use it to shield goods from high winds, heavy snow or ice storms. Only use it for its intended use.
× **DO NOT** assemble in high winds.

2. INTRODUCTION

Tarpaulin cover is made of a PE (polyethylene) material of a 3-layer construction with rip-stop to help prevent tears. UV resistant and offers long-life and protection to stored items. Cover extends to the floor to further protect from against crosswinds. Includes ratchets on each corner ensuring the tarpaulin cover is always under tension and secured to the frame which helps protect the car port during wind and rain. Features a full width roll down door that makes accessibility easy. Zips keep the door shut securely and toggles can hold the door up and out of the way. Zinc plated steel tubing provides protection from rust and corrosion. Push-fit tubing makes assembly simple. The tarpaulin cover ties onto the frame and ratchets in place, so the cover remains taught.

3. SPECIFICATION

Model No:	GCP03
Door Size:	2.7m x 2.15m
Material:	Polyethylene Tarpaulin - 200gsm
Nett Weight:	91kg
Overall Size (W x D x H):	4 x 8 x 3.05m

© Jack Sealey Limited

4. CONTENTS

NOTE: Review all parts before attempting assembly. Make sure all components are available and usable.
NOTE: Frame elements are marked with part numbers which are used in assembly directions.
NOTE: It is recommended that two people working together build this item to avoid any damages due to over-twisting of frames.

4.1. FULL ASSEMBLY

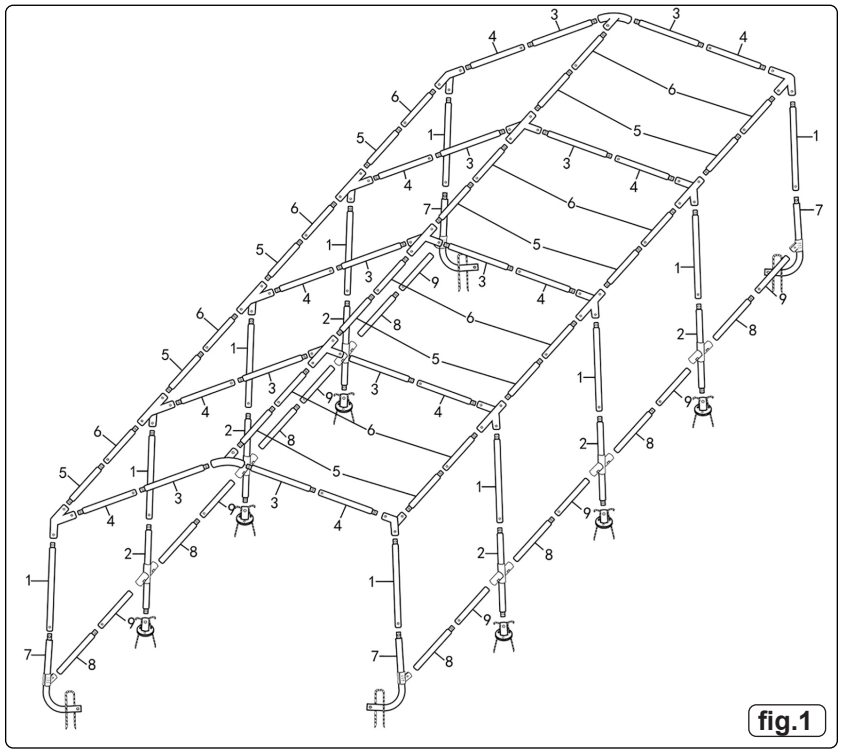

Recommended tools:
10m measuring tape
Step ladder
Rope

4.2. PARTS

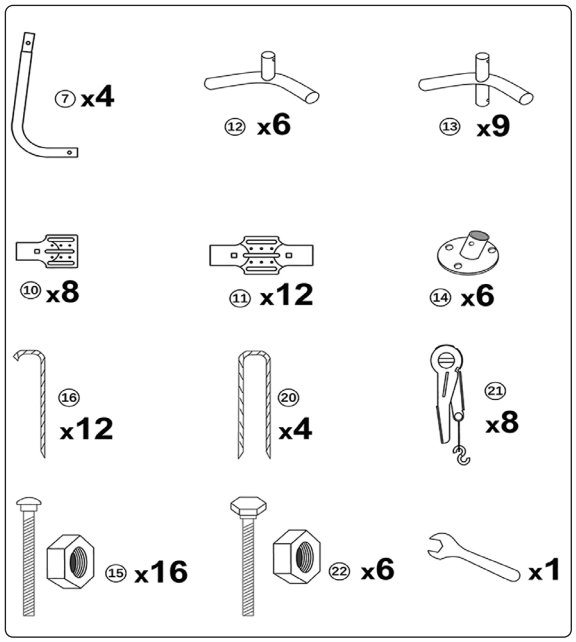

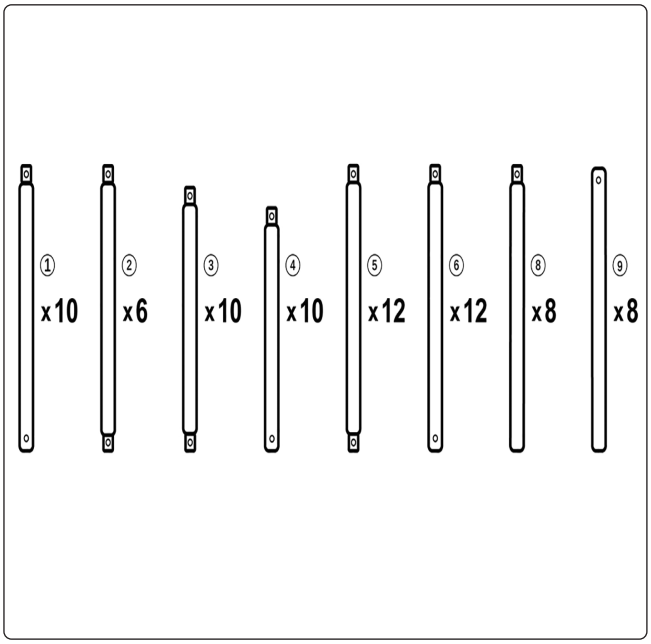

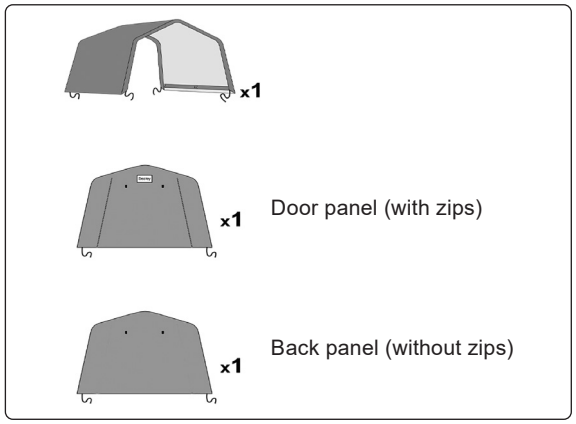

5. ASSEMBLY

5.2.1. Connect pole items 5 and items 6 together to create 9 longitudinal members (fig.2).
5.2.2. Connect 4 Way connectors (item 13) to assembled items 5 and 6 (see section 4.3.1) in locations shown below.
5.2.3. Connect 3 Way Ridge Connector (item 12) to all 3 Rails in locations shown below.
5.2.4. Connect 8 rafters (item 3) to items 12 and 13 fitted to the three roof rails in locations shown below.

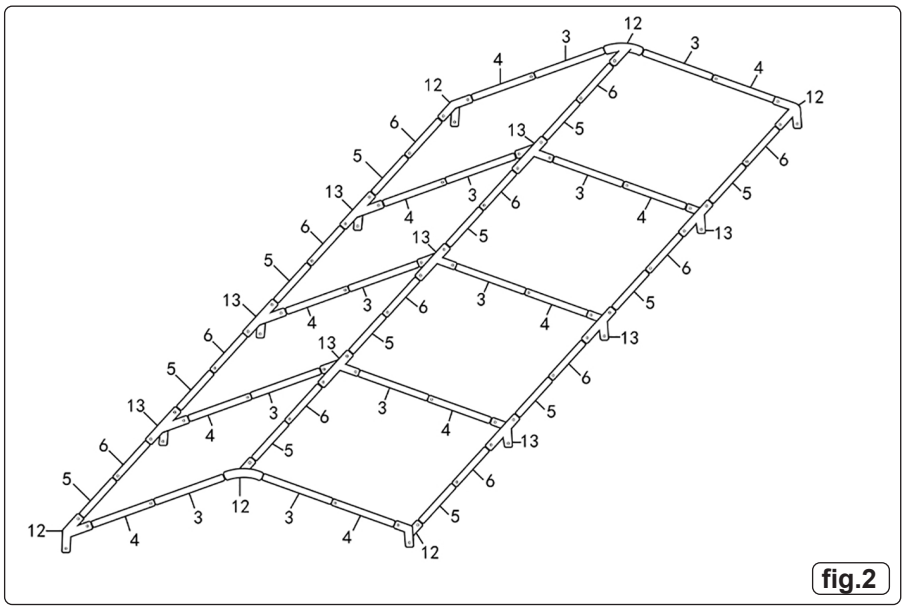

5.1. SIDE ASSEMBLY (fig.3, fig.4)
5.1.1. Connect items 8 and items 9 together to create lower 6 longitudinal members.
5.1.2. Connect upright poles (item 1) to items 12 and items 13 in roof assembly.
5.1.3. Connect items 7 (curved feet) to item 1 and also to item 8 using clamps (item 10) and fixings (item 15) in locations shown below.
NOTE: DO NOT tighten fixings at this stage.
5.1.4. Repeat the process for the other side.

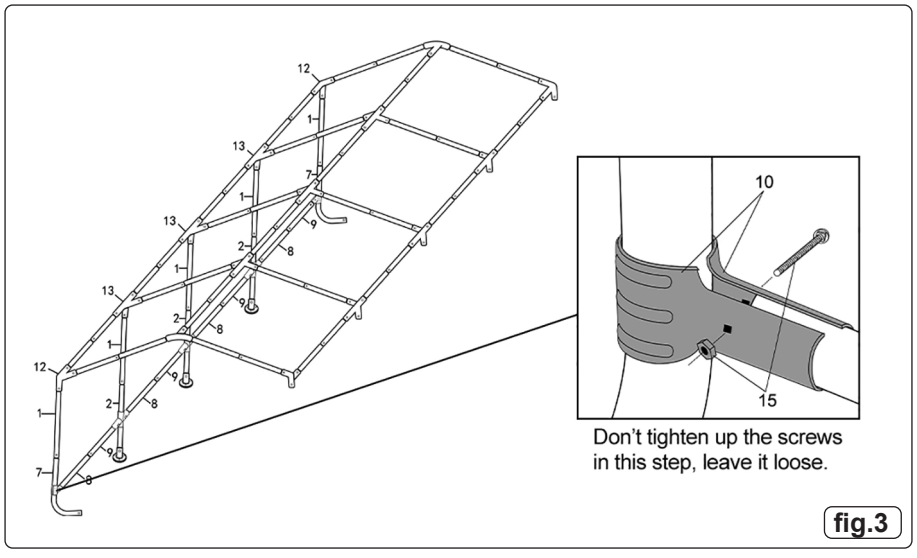

5.1.5. Connect items 2 to items 8 and items 9 (see diagram) using clamps (item 11) and fixings (item 15) in locations shown below.
NOTE: DO NOT tighten fixings at this stage.

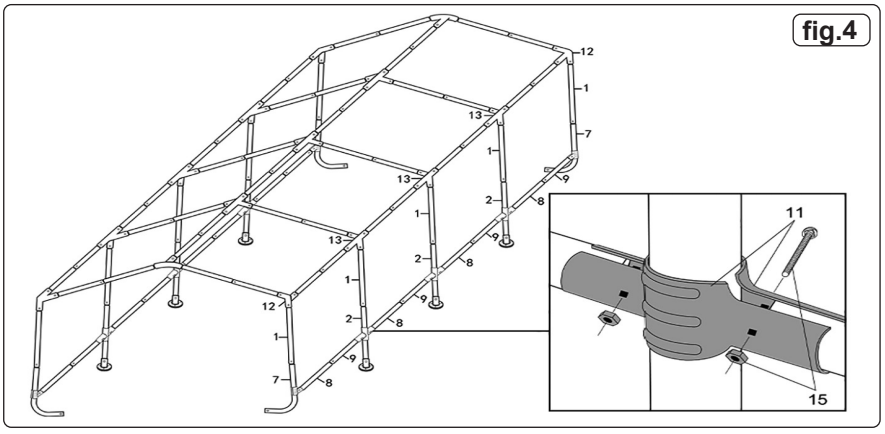

© Jack Sealey Limited

5.2. SURVEY FOR SQUARENESS (fig.5)

NOTE: When the assembled shelter is in correct position for intended use, perform squareness check.

NOTE: It is essential to check the assembly for squareness. If the unit is misshapen, it may not be possible to fit the covers.

5.2.1. Accurately measure the dimensions illustrated below. If dimensions differ (see table), recheck assembly and adjust standing shape to achieve the correct values.

5.2.2. When the shelters squareness is confirmed, tighten all fixings to hold the frame in position.

5.2.3. Fix the shelters feet (item 14, fig.1) in position using the supplied stakes (item 16, fig.1).

5.2.4. Fix the shelters corners (item 7, fig.1) in position using the supplied stakes (item 20, fig.1).

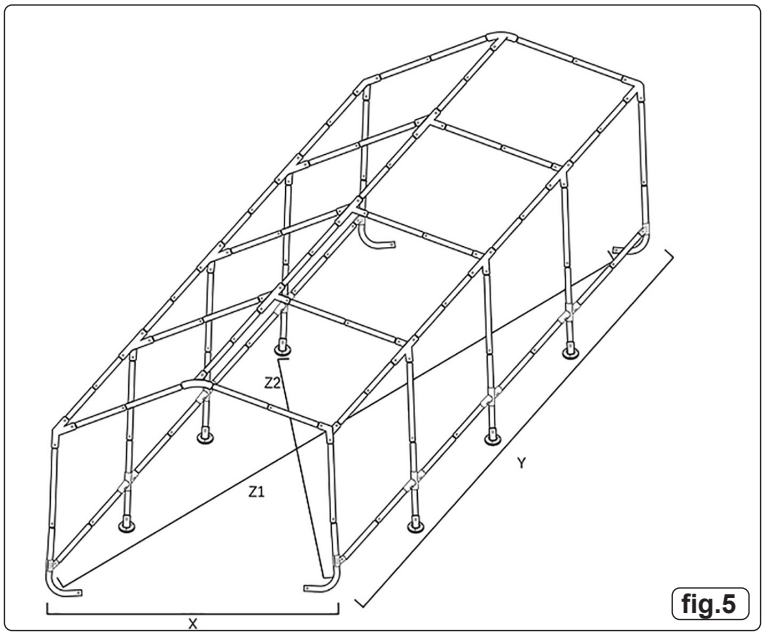

fig.5

Dimension	Value
X	4m
Y	8m
Z1	8.9m
Z2	8.9m

5.3. FITTING COVERS

5.3.1. FRONT PANEL (WITH ZIPS) AND REAR PANEL (fig.6)

5.3.2. Locate end panels over the frame and clip the hook of the ratchet (item 21) at one end of the mounting cord into the hole in the foot (item 7).

5.3.3. Pull the cord tight on the other end so the cover is firmly held over the frame and clip the hook of the ratchet (item 21) into the hole in the foot (item 7).

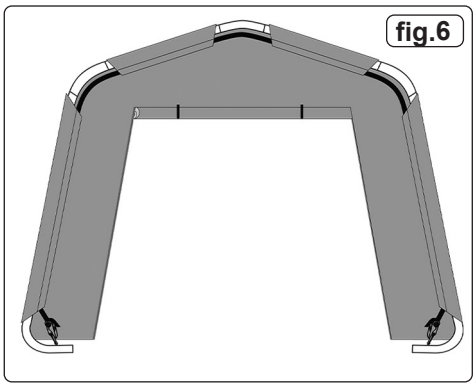
fig.6

5.4. TOP COVER (fig.7, fig.8)

NOTE: It is recommended that at least two people are used for this operation.

5.4.1. Drag and drop the cover over the roof making sure that the cover is equally disposed.

5.4.2. Separate frame members (item 8, item 9) and insert into the pockets in the cover.

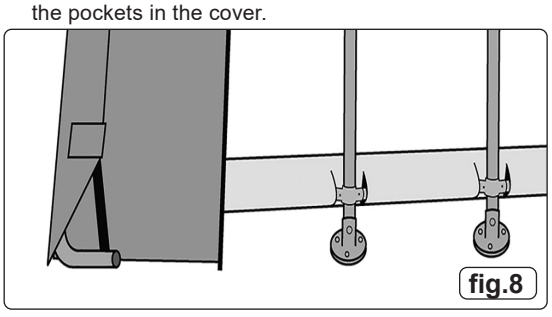
fig.8

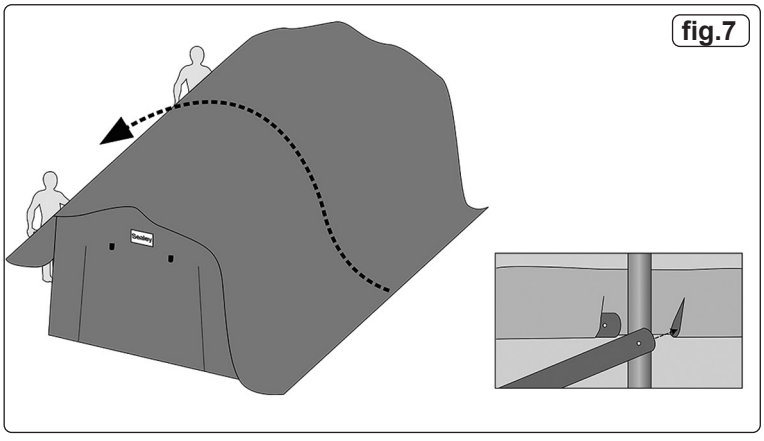
fig.7

© Jack Sealey Limited

5.4.3. FINAL FITTING (fig.9)

To enable a secure fit of the roof cover to the frame, press down on the frame members to tension the cover and tighten screws.

Secure all four top cover corners to the outside of the corner legs using the hook on the ratchet (item 21, fig.8).

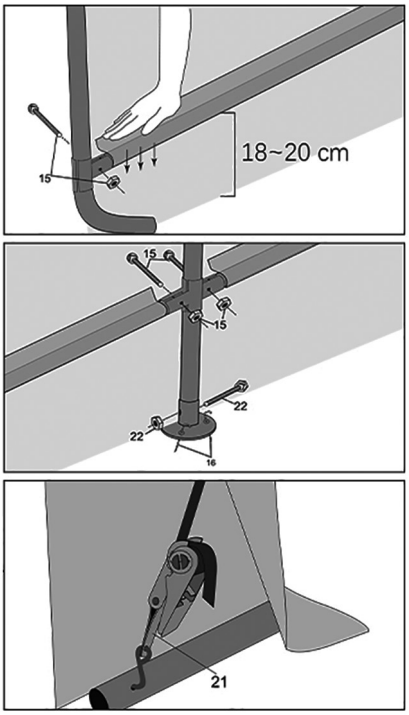

fig.9

6. MAINTENANCE

6.4.1. Regularly check all fixings are secure and anchors well embedded especially after bad weather periods.

× **DO NOT** use bleach, alkaline or harsh detergents for cleaning. Doing so will damage the polycarbonate material. Soap and warm water are recommended.

.

ENVIRONMENT PROTECTION

Recycle unwanted materials instead of disposing of them as waste. All tools, accessories and packaging should be sorted, taken to a recycling centre and disposed of in a manner which is compatible with the environment. When the product becomes completely unserviceable and requires disposal, drain any fluids (if applicable) into approved containers and dispose of the product and fluids according to local regulations.

Note: It is our policy to continually improve products and as such we reserve the right to alter data, specifications and component parts without prior notice.
Important: No Liability is accepted for incorrect use of this product.
Warranty: Guarantee is 12 months from purchase date, proof of which is required for any claim.

REGISTER YOUR PURCHASE HERE

Jack Sealey Ltd t/a Sealey Group, Kempson Way, Suffolk Business Park, Bury St Edmunds, Suffolk, IP32 7AR UK
Jack Sealey (EU) Ltd t/a Sealey Group, Farney Street, Carrickmacross, Co. Monaghan, A81 PK68 Ireland
Tel: 01284 757500 ▪ **Email:** sales@sealey.co.uk ▪ **Web:** www.sealey.co.uk

© Jack Sealey Limited